REVISIONS				
ZONE	REV	DESCRIPTION	DATE	APPROVED

Ext Fin Can V2.1 Step 2

1) Set A=0°.
2) Using 3/8" end mill, Cut the 6.4" x 1.3" area
   leaving behind the fin tab
   and the bottom centering ring tab.
   Z moves from 1.5" to 1.285".
3) Repeat with A=90°, 180°, and 270°.

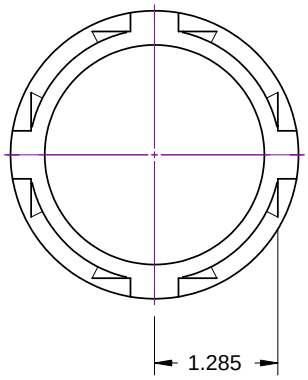

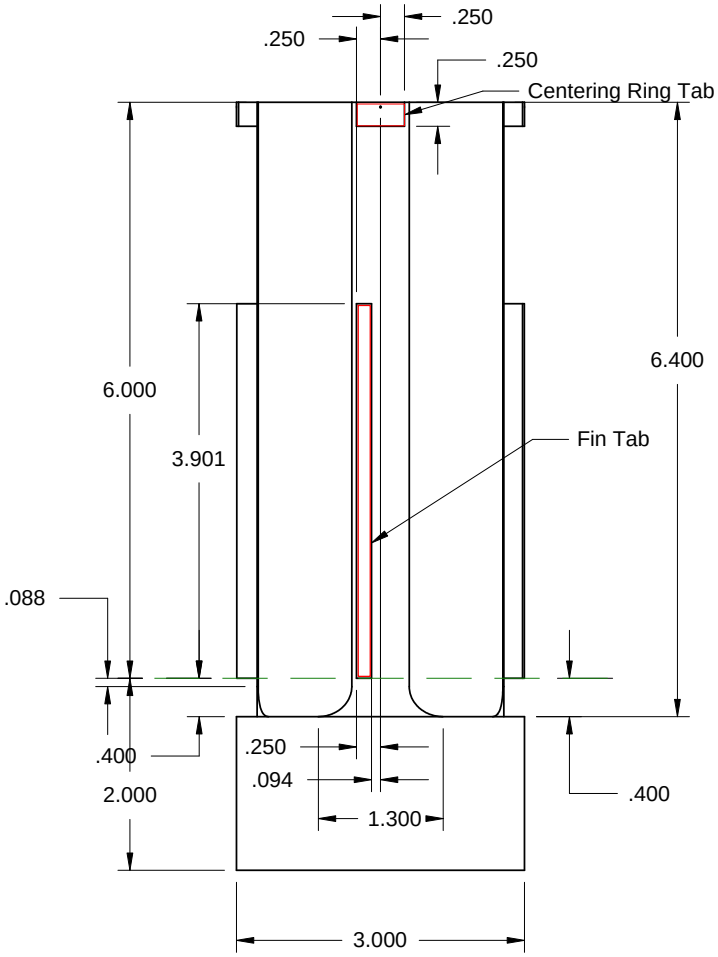

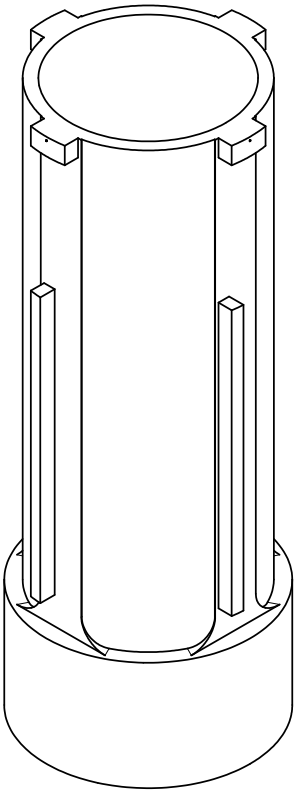

SIZE	FSCM NO.	DWG NO.	REV
A			
SCALE	B. Feretich	SHEET	