REVISIONS				
ZONE	REV	DESCRIPTION	DATE	APPROVED

Ext Fin Can V2.1 Step 1

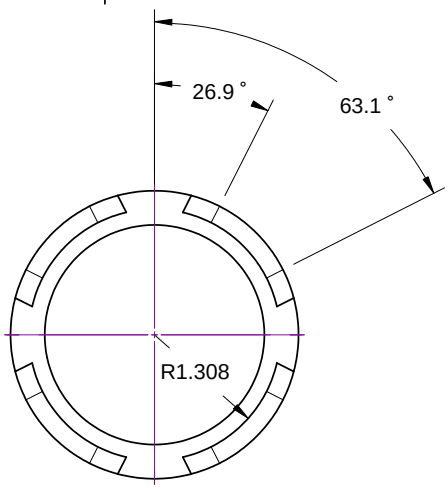

On lathe:
1) True faces of 3" OD, 2" ID, 8" long thick walled tube.
2) Bore 2.616" ID.
On 4-axis mill:
1) Mark 90° points with 1/64" drill.
2) Using 5/8" roughing mill, Create a pocket.
(X=0, Y=0, A=26.9) to (X=-.088, A=63.1);
No tool offset. Z moves from 1.5" to 1.308".
3) Replicate with 90°, 180°, and 270° offsets on A.

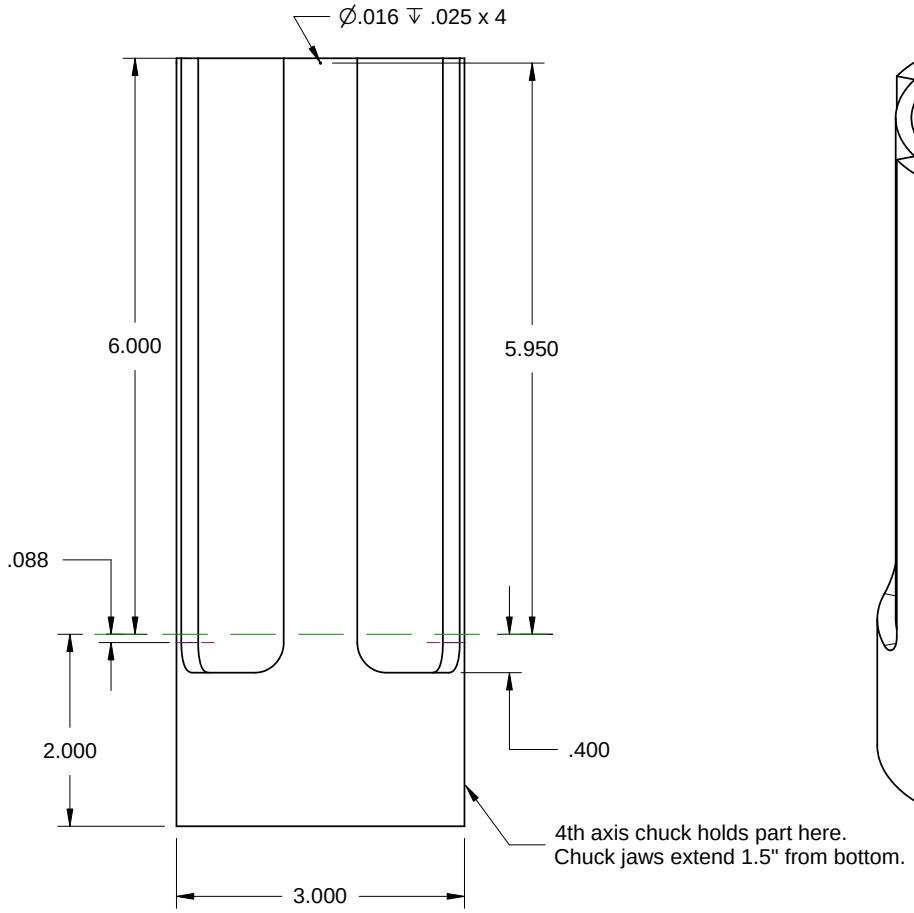

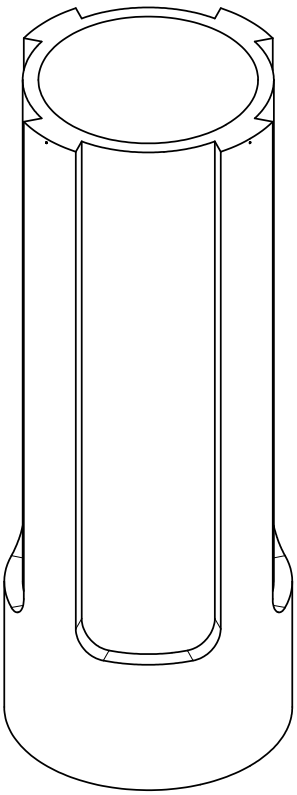

SIZE	FSCM NO.	DWG NO.	REV
A			
SCALE	B. Feretich	SHEET	